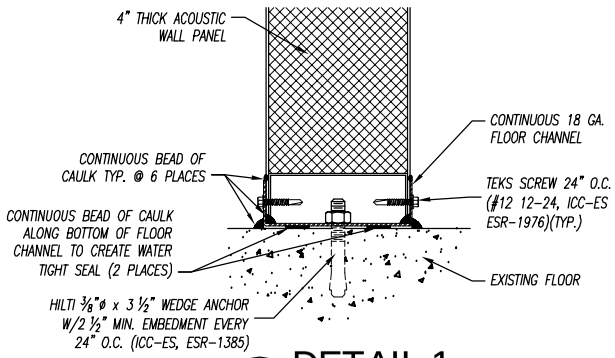

1/16 DETAIL 1
WALL PANEL @ FLOOR

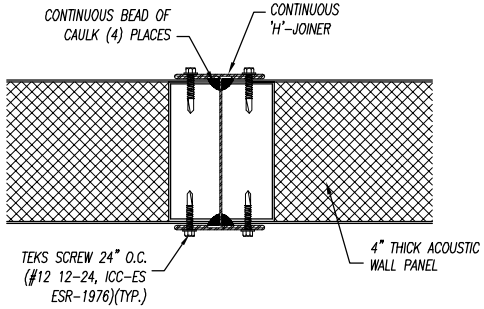

2/16 DETAIL 2
STRAIGHT PANEL JOINT

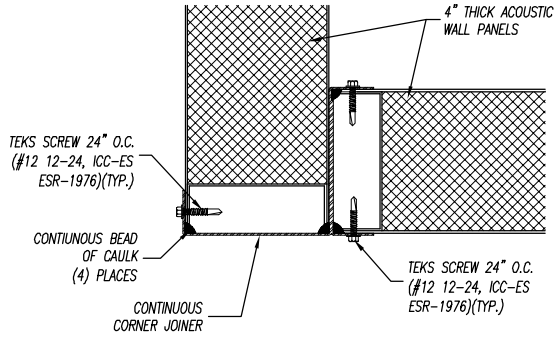

3/16 DETAIL 3
CORNER PANEL JOINT

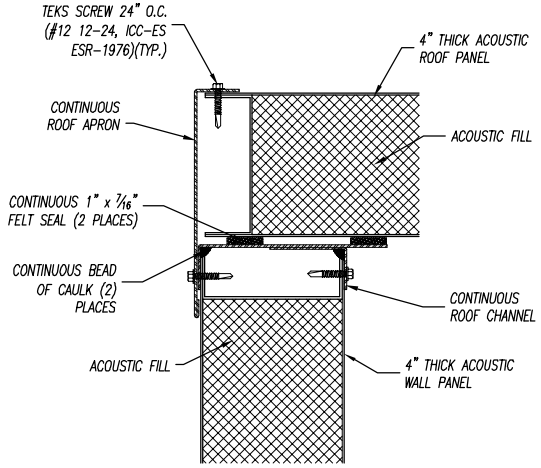

4/16 DETAIL 4
WALL PANEL @ ROOF PANEL

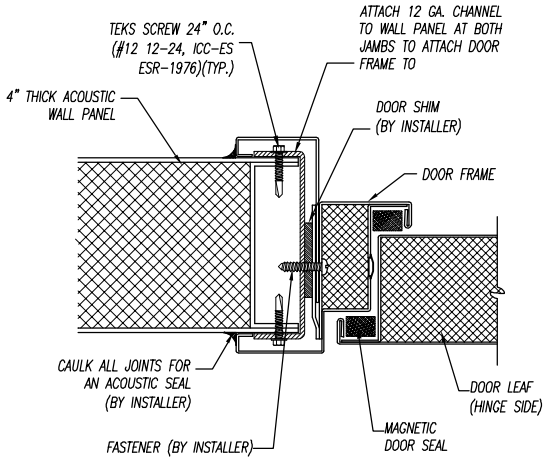

5/16 DETAIL 5
DETAIL @ DOOR JAMB/HEAD (ACOUSTIC DOOR)

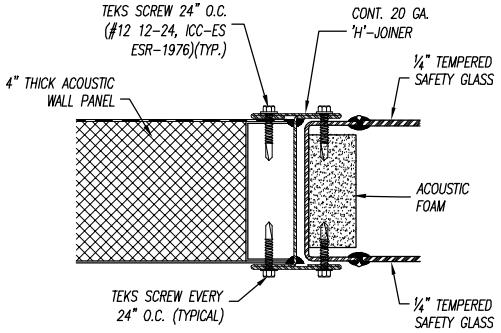

6/16 DETAIL 6
ACOUSTIC WINDOW DETAIL @ JAMB/HEAD/SILL

REVISIONS	DESCRIPTION	DATE	BY

DESCRIPTION: TYPICAL INSTALLATION DETAILS		
CUSTOMER		
DRAWN BY: MAH	SCALE	DRAWING NO. JOINERS-2
DATE	SHEET	

Noise Barriers, LLC
2001 Kelley Court, Libertyville, IL 60048
Phone: 847-843-0500
Fax: 847-843-0501
www.noisebarriers.com