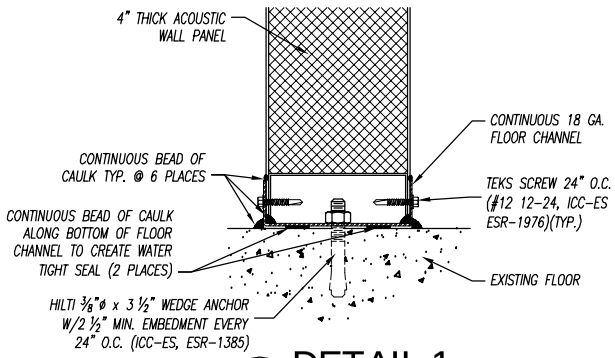

1/16 DETAIL 1
WALL PANEL @ FLOOR

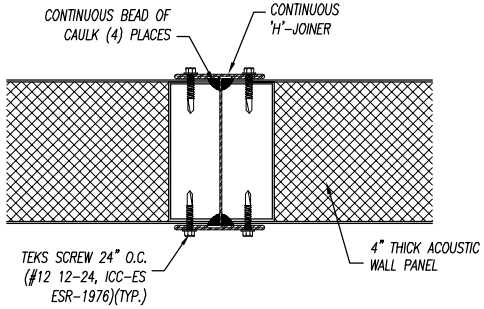

2/16 DETAIL 2
STRAIGHT PANEL JOINT

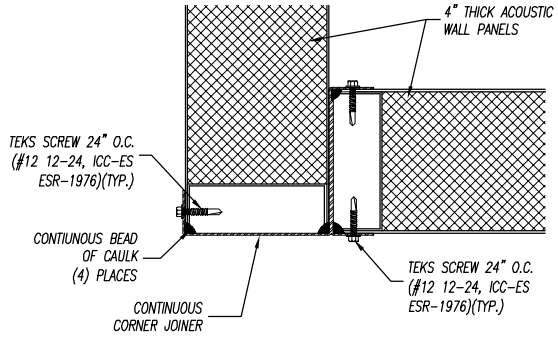

3/16 DETAIL 3
CORNER PANEL JOINT

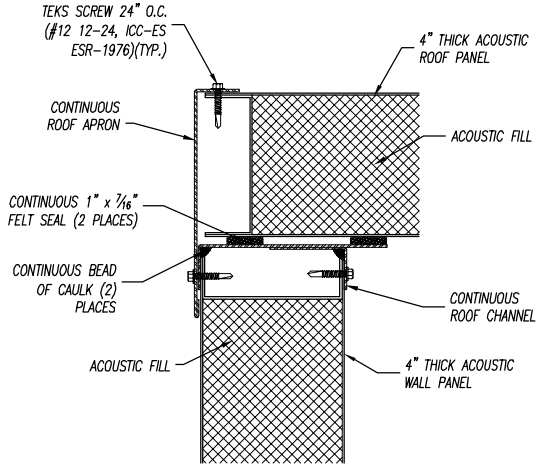

4/16 DETAIL 4
WALL PANEL @ ROOF PANEL

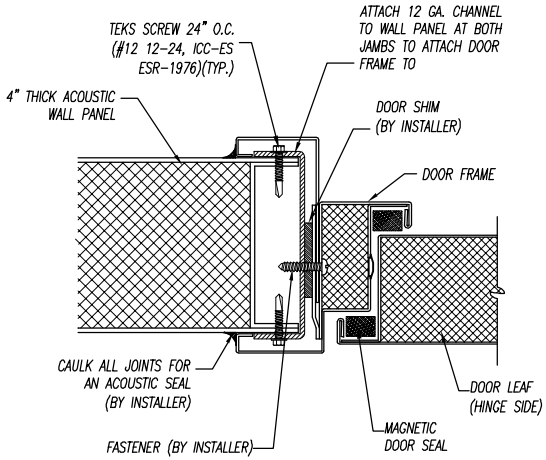

5/16 DETAIL 5
DETAIL @ DOOR JAMB/HEAD (ACOUSTIC DOOR)

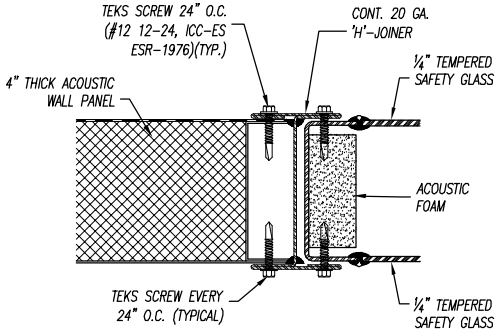

6/16 DETAIL 6
ACOUSTIC WINDOW DETAIL @ JAMB/HEAD/SILL

REVISIONS	DESCRIPTION	DATE	BY

DESCRIPTION: TYPICAL INSTALLATION DETAILS
CUSTOMER:
DRAWN BY: MAH
SCALE:
DRAWING NO.: JOINERS-2
DATE:
SHEET:

Noise Barriers, LLC
1207 Remington Rd., Suite E
Schaumburg, IL 60173
Phone: (847) 843-0500
Fax: (847) 843-0501
www.noisebarriers.com