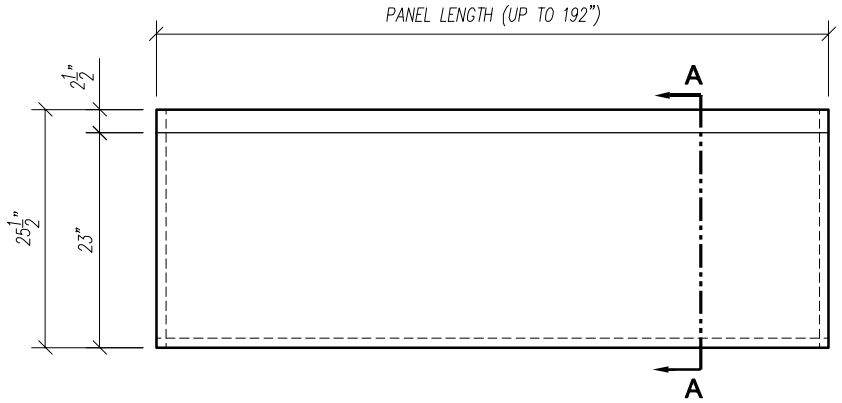

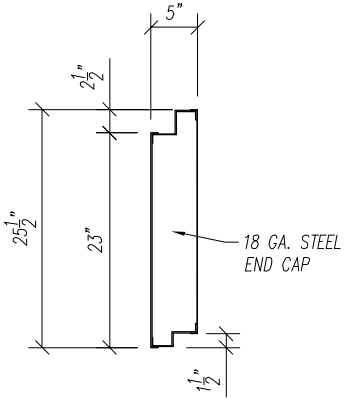

'SL-R' ACOUSTIC BARRIER WALL PANEL

FRONT & SIDE ELEVATIONS

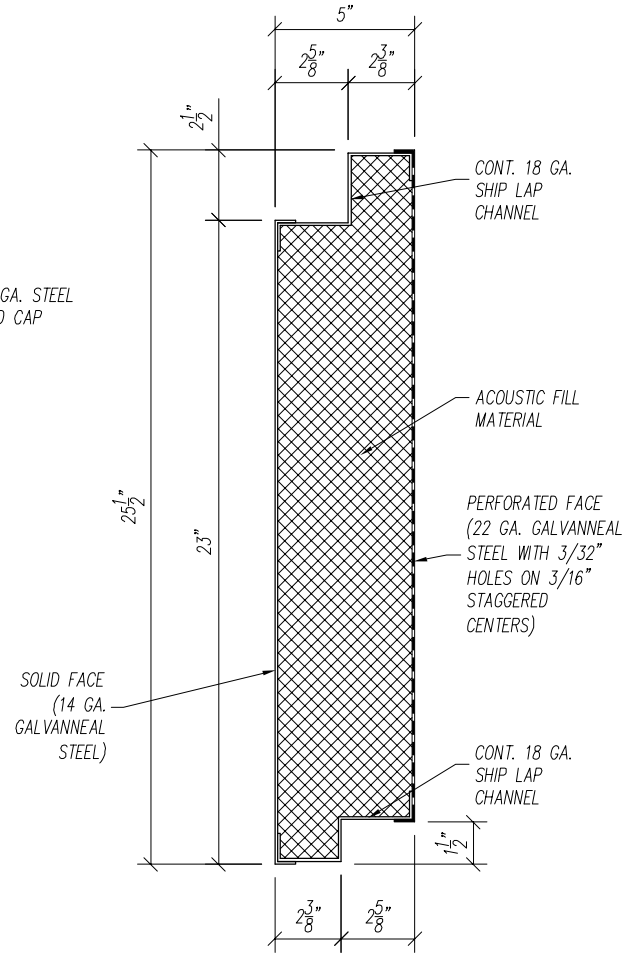

SECTION A-A

PANEL No.	QTY.	PANEL LENGTH

'SL-R' BARRIER PANEL

REVISIONS	DESCRIPTION	DATE	BY

DESCRIPTION QUIETLINE 'SL-R' BARRIER PANEL		
PROJECT		
DRAWN BY	SCALE	DRAWING NO. SLR-2
DATE	SHEET	

Noise Barriers, LLC
2001 Kelley Court, Libertyville, IL 60048
Phone: 847-843-0500 Fax: 847-843-0501
www.noisebarriers.com