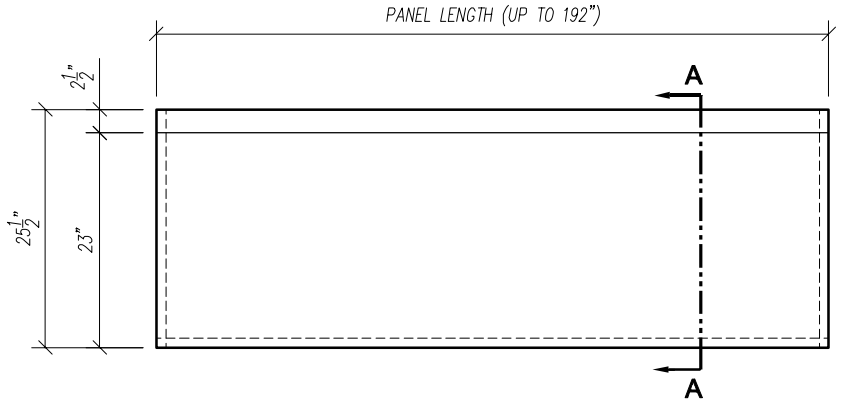

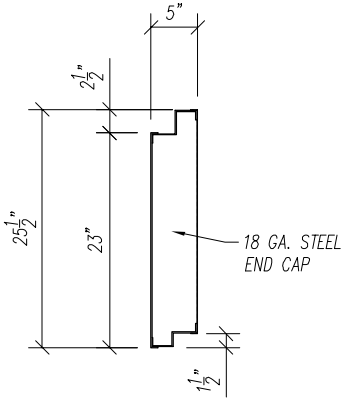

'SL-R' ACOUSTIC BARRIER WALL PANEL

FRONT & SIDE ELEVATIONS

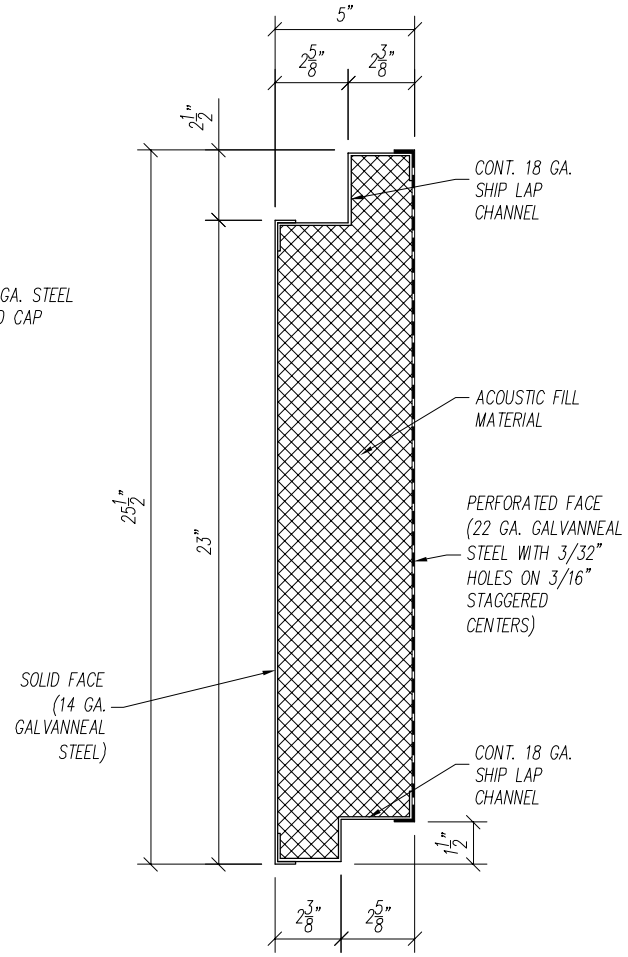

SECTION A-A

PANEL No.	QTY.	PANEL LENGTH

'SL-R' BARRIER PANEL

REVISIONS	DESCRIPTION	DATE	BY

DESCRIPTION: QUIETLINE 'SL-R' BARRIER PANEL		
PROJECT		
DRAWN BY	SCALE	DRAWING NO. SLR-2
DATE	SHEET	

Noise Barriers, LLC
1207 Remington Rd., Suite E
Schaumburg, IL 60173
Phone: (847) 843-0500
Fax: (847) 843-0501
www.noisebarriers.com