CONSTRUCTION/ASSEMBLY NOTES:

1.) PANEL SURFACES: SOLID FACE IS 16 GA. COLD ROLLED STEEL WITH A-60 GALVANNEAL COATING. PERFORATED FACE IS 22 GA. WITH 3/32" HOLES ON 3/16" STAGGERED CENTERS.

2.) PANEL FILL: NON-COMBUSTIBLE, SOUND ABSORBING FIBERGLASS

3.) FINISH: STD. FINISH IS "PAINT READY" GALVANNEAL. THERMOSETTING TGIC POLYESTER POWDER COATING IS AVAILABLE. COLOR TO BE SELECTED BY ARCHITECT/ CUSTOMER FROM STANDARD COLOR CHART SUPPLIED BY NOISE BARRIERS, LLC. **COLOR TO BE:** _____

4.) PANELS ARE INSTALLED VERTICALLY AND SUPPORTED BY THE CONTINUOUS STRUCT. STEEL BOTTOM ANGLE AND ANCHORED WITH SELF-TAPPING SCREWS TO CONTINUOUS STRUCT. STEEL TOP ANGLE.

BARRIER PANEL ACOUSTIC PERFORMANCE

SOUND TRANSMISSION LOSS, dB

OCTAVE BAND CENTER FREQUENCIES (Hz)	125	250	500	1K	2K	4K	STC
QUIETLINE H/P-42 V-STACK PANEL	23	31	40	49	56	62	42

*All data in accordance with ASTM E90-99 and E413-87

SOUND ABSORPTION COEFFICIENTS

OCTAVE BAND CENTER FREQUENCIES (Hz)	125	250	500	1K	2K	4K	NRC
QUIETLINE H/P-42 V-STACK PANEL	0.68	1.06	1.12	1.08	1.03	0.98	0.95 (1.05)

*All data in accordance with ASTM C423-90a and E795-00

BARRIER WALL
ISOMETRIC VIEW

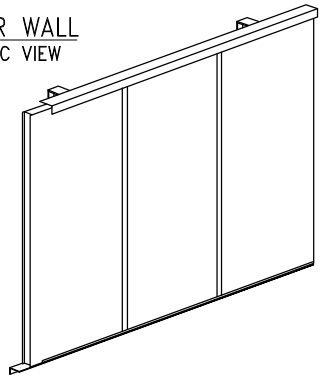

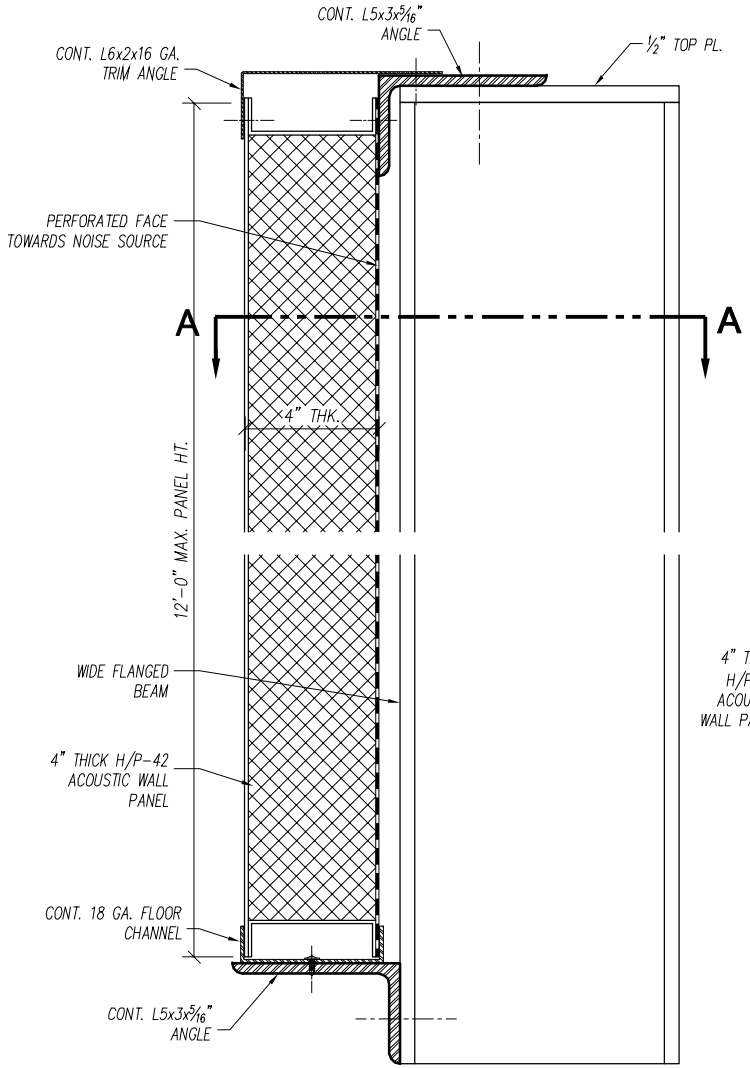

WALL SECTION DETAIL

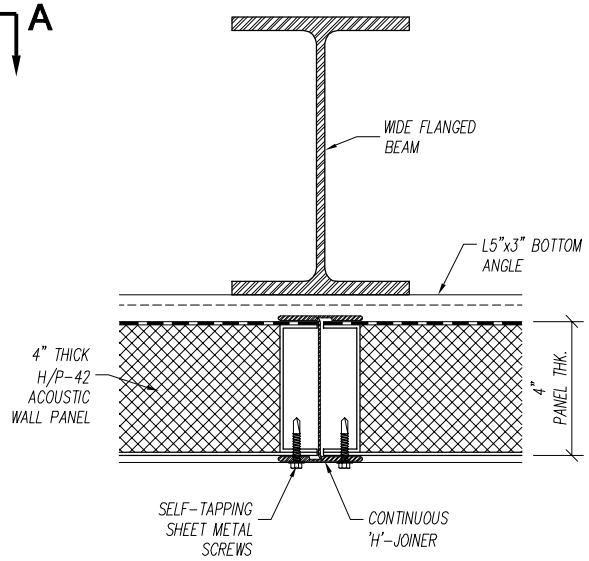

SECTION A-A

REVISIONS	DESCRIPTION	DATE	BY

DESCRIPTION: QUIETLINE H/P-42 BARRIER PANEL		
PROJECT		
DRAWN BY	SCALE	DRAWING NO. H/P-42-1
DATE	SHEET	

Noise Barriers, LLC
2001 Kelley Court, Libertyville, IL 60048
Phone: 847-843-0500
Fax: 847-843-0501
www.noisebarriers.com